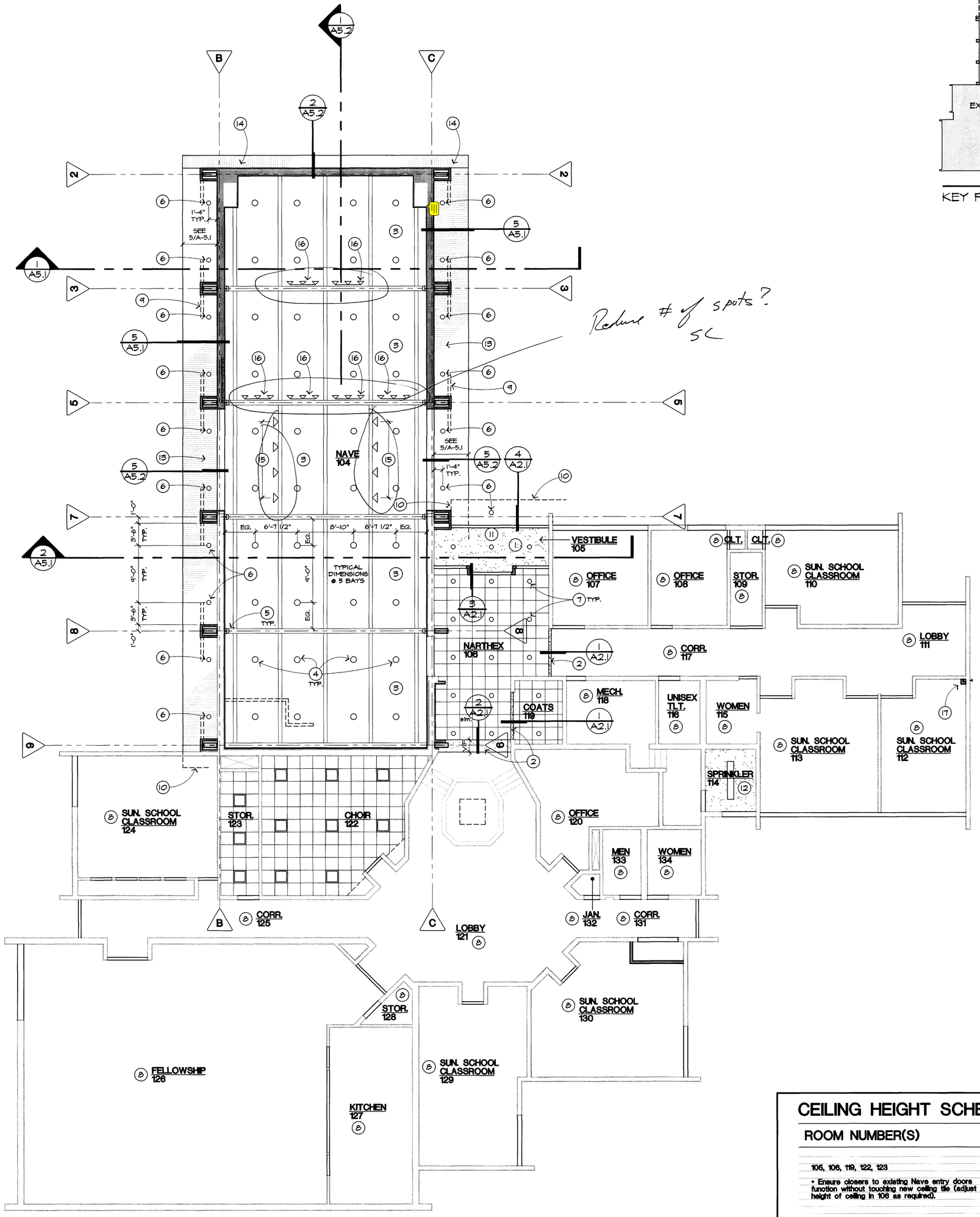

1/8" = 1'-0" **REFLECTED CEILING PLAN**

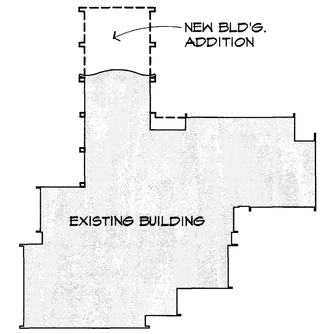

KEY PLAN N.T.S

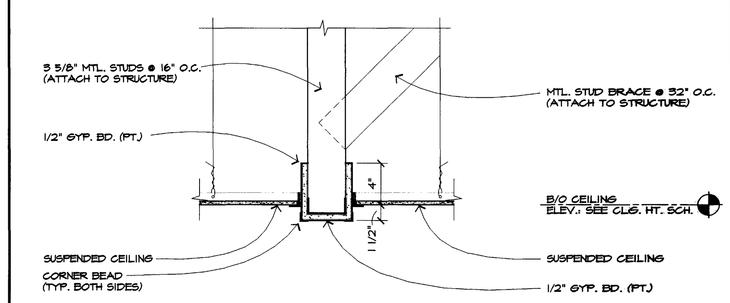

1 1/2" = 1'-0" **1 SECTION DETAIL**

XD-50-05-012A (SIM.)

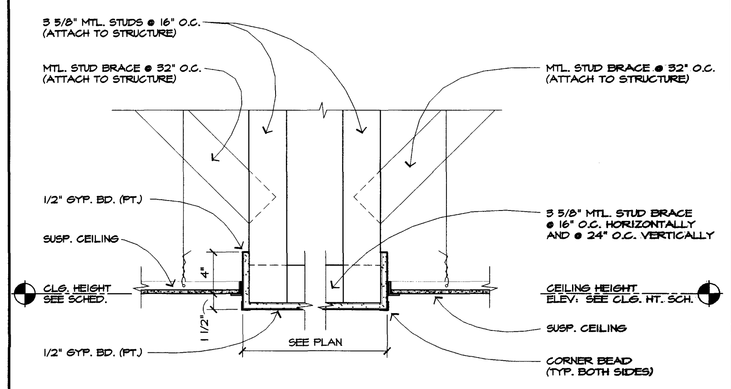

1 1/2" = 1'-0" **2 SECTION DETAIL**

XD-50-05-NEW2

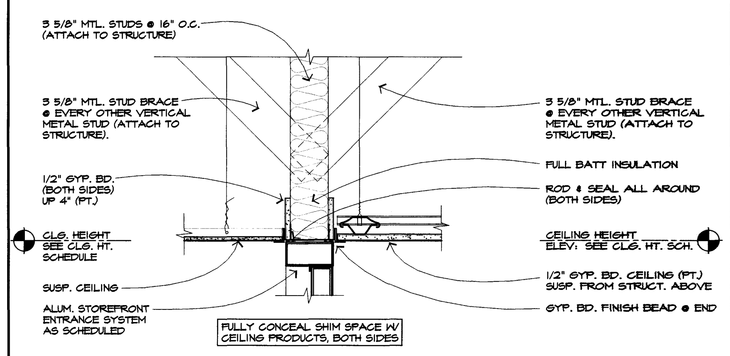

1 1/2" = 1'-0" **3 SECTION DETAIL**

XD-50-05-NEW1

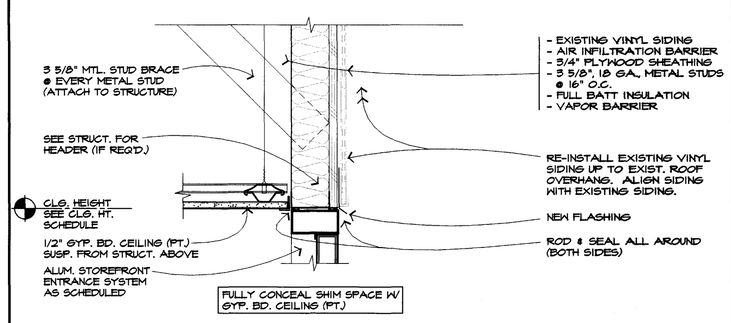

1 1/2" = 1'-0" **4 SECTION DETAIL**

XD-50-05-NEW3

CEILING HEIGHT SCHEDULE

ROOM NUMBER(S)	HEIGHT FROM FINISH FLOOR
105, 106, 119, 122, 123	7'-11 1/2" *
* Ensure closers to existing Nave entry doors function without touching new ceiling tile (adjust height of ceiling in 106 as required).	
104	OPEN TO STRUCTURE ABOVE
114	AS HIGH AS POSSIBLE IN ONE SINGLE PLANE, SEE KEYNOTE #12 ON THIS SHEET

NOTE: Refer to Project Manual and other drawings (notes, plans, sections, details, etc..) for soffits, enclosures and other ceiling related construction data. Coordinate and adjust all ceiling heights indicated to integrate with other trades and on-site conditions.

REFLECTED CEILING PLAN NOTES

General:

Nothing contained in these drawings or notes supersedes or relieves the Contractor of their responsibilities for the means, methods, techniques, sequences and procedures of construction, nor the safety precautions and programs, nor the safety of persons and property.

Locate fixtures per dimensions given on this drawing. Refer to Electrical Documents for further information.

1. Gyp. bd. ceiling (PT.). See detail 1/A-7.2.
2. Gyp. bd. soffit (PT.). See details on A-2.1.
3. Open to structure above.
4. Light Fixtures by Owner (NLC.). Pendant-mounted light fixtures Alt. Bid (See Electrical Documents).
5. Light fixtures by Owner (NLC.). Wall-mounted light fixtures to match pendants Alt. Bid (See Electrical Documents).
6. Exterior light fixture in soffit (see Electrical Documents).
7. Center lights on ceiling tile (typ.) (see Electrical Documents).
8. Existing light fixtures and ceiling system to remain. Remove and reinstall as required for completion of the work.
9. Dashed line is wood purlin structure concealed in soffit (see Structural Documents).
10. Dashed line is existing or new roof overhang above.
11. Prefinished and recessed cabinet heater (see Mechanical Documents).
12. Gyp. bd. ceiling (PT.). See detail 1/A-7.2. Provide 3 1/2" of additional batt insulation above ceiling in this space.
13. Vented, vinyl soffit system at roof overhang.
14. Solid, vinyl soffit system at roof overhang.
15. Controlled-beam light fixture equipped with timer & switch override to illuminate Owner's stained glass. Mount to east or west side (see plan) of wood purlin (see Elec. Documents). PT. any exposed conduit (color by Architect).
16. Track lighting. Mount to north face of structure (see Elec. Documents). PT. any exposed conduit (color by Arch).
17. Repair existing ceiling as required to facilitate new construction.

© David F. Schultz Associates, Ltd. All Rights Reserved.

David F. Schultz Associates, Ltd.
202 South Cook Street
Suite 201
Barrington, Illinois 60010
Phone (847) 381-8808

99% CONSTRUCTION DOCUMENTS

ST. LUKE PRESBYTERIAN CHURCH

DOWNERS GROVE, ILLINOIS

FOR OWNER REVIEW

REVISIONS

NOT FOR CONSTRUCTION!

DATE
JULY 31, 2008

PROJECT NUMBER
9908

SHEET NUMBER
A-2.1

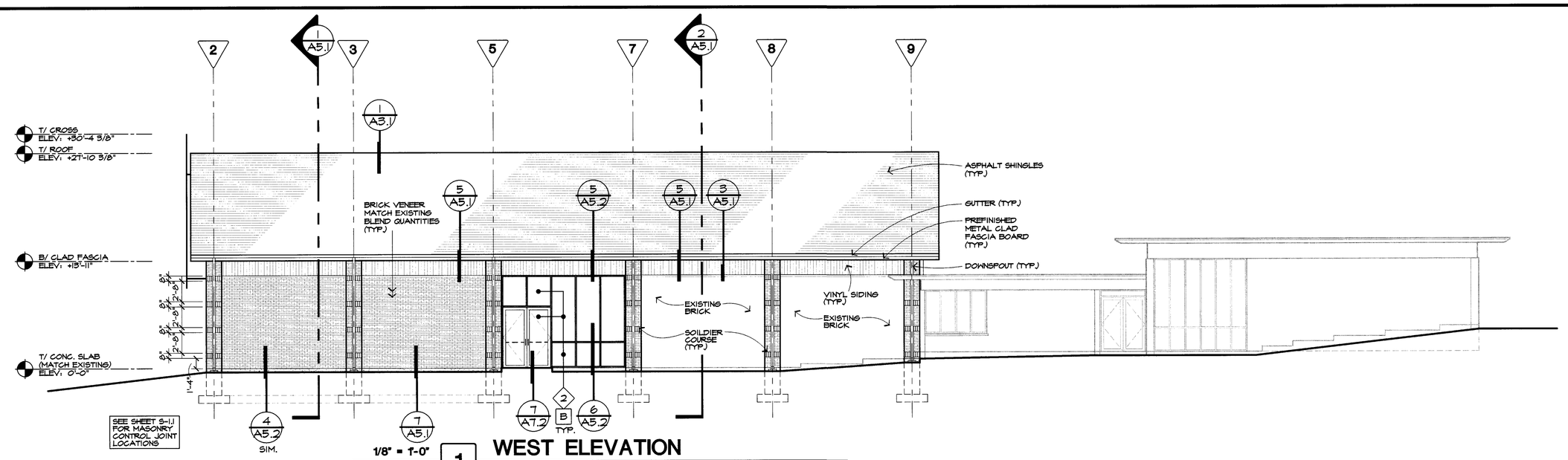

1/8" = 1'-0" **1 WEST ELEVATION**

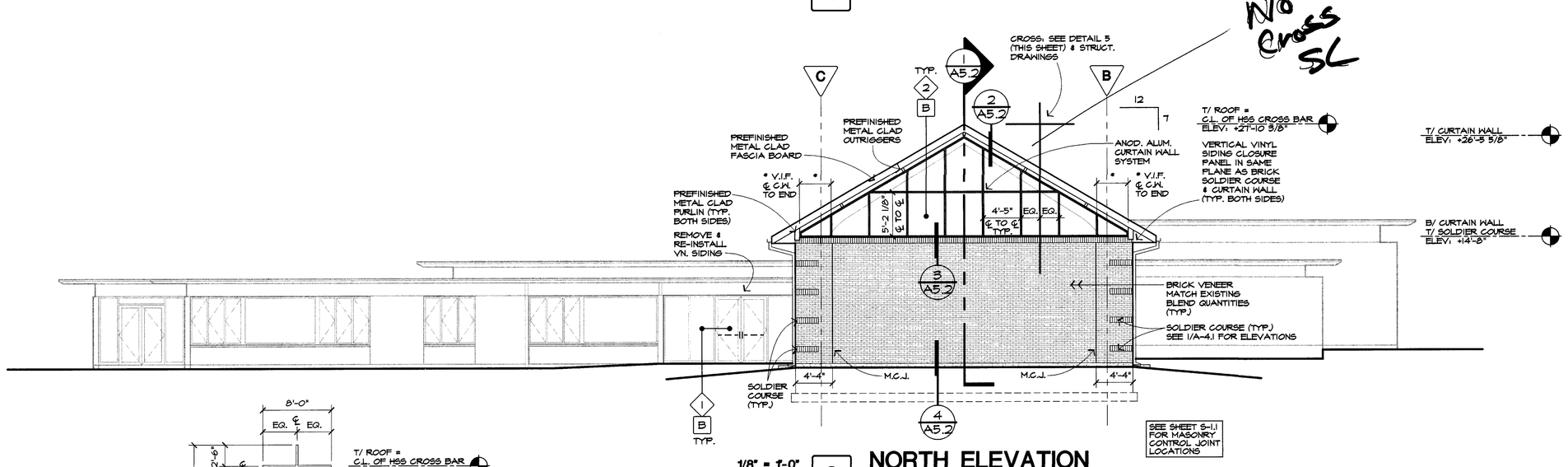

1/8" = 1'-0" **2 NORTH ELEVATION**

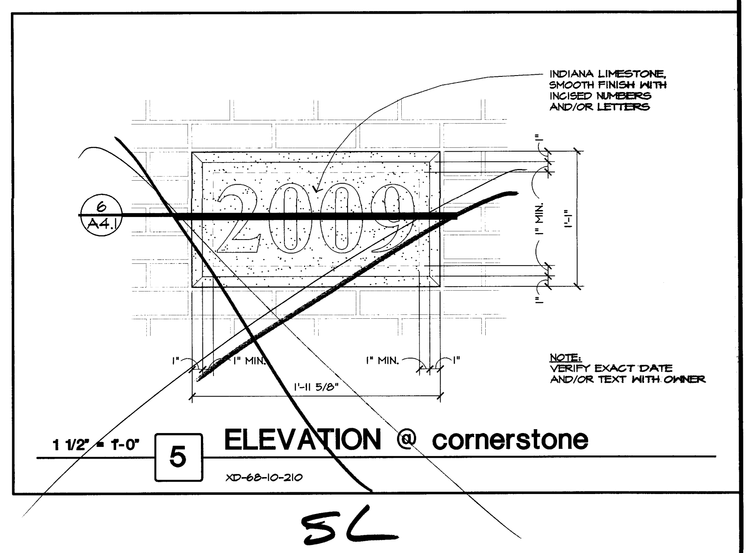

1 1/2" = 1'-0" **5 ELEVATION @ cornerstone**

XD-68-10-210

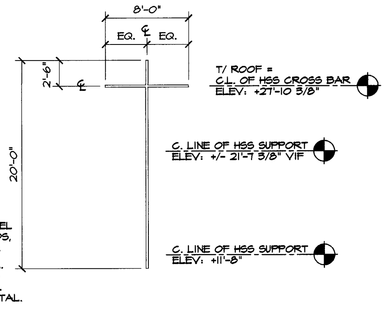

1/8" = 1'-0" **5 ELEVATION @ exterior cross**

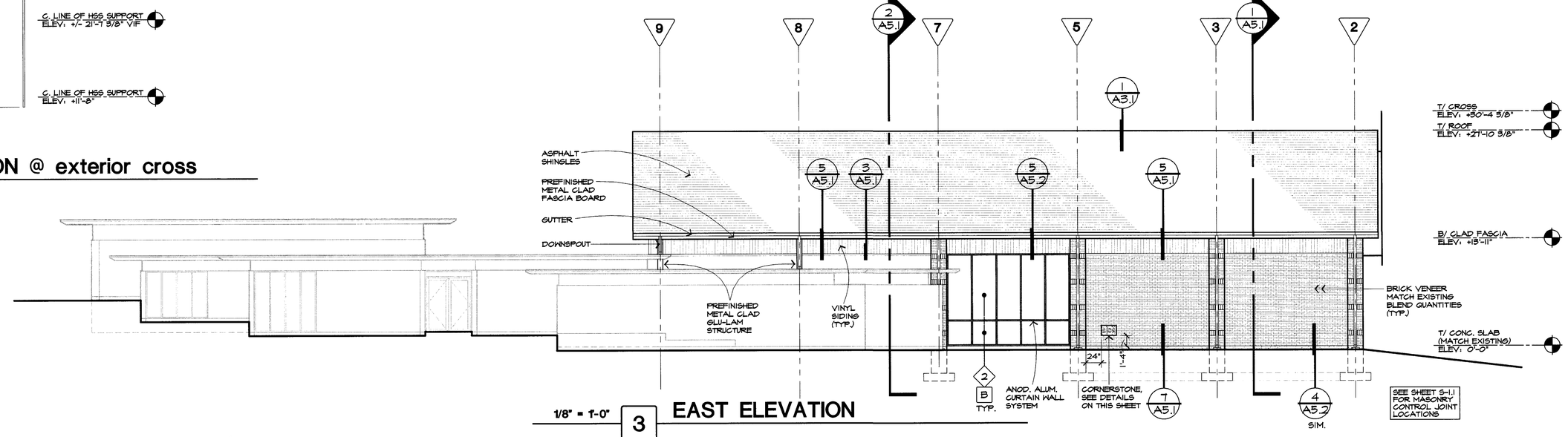

1/8" = 1'-0" **3 EAST ELEVATION**

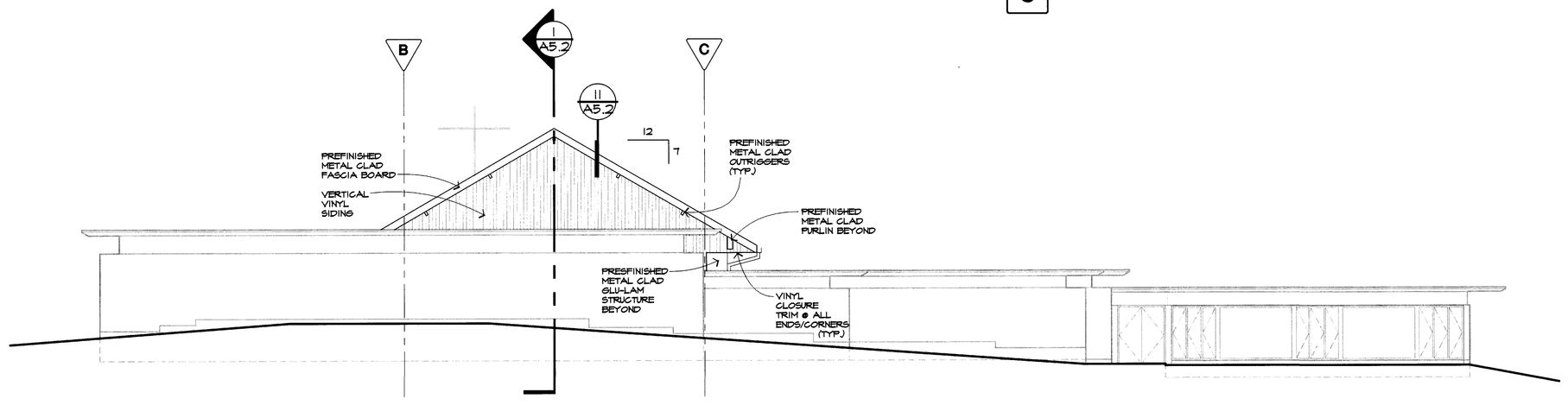

1/8" = 1'-0" **4 SOUTH ELEVATION**

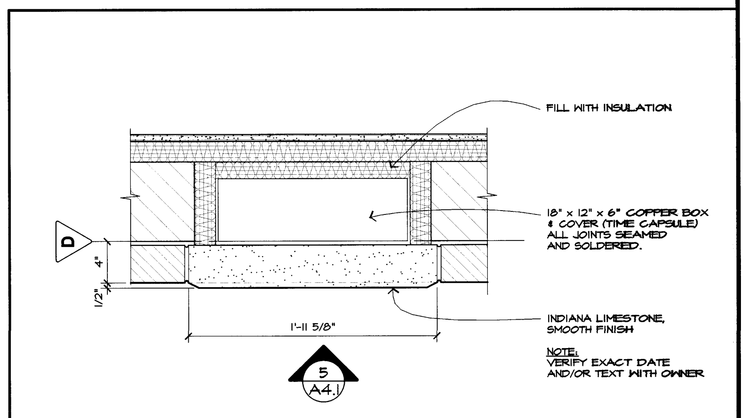

1 1/2" = 1'-0" **6 PLAN DETAIL @ cornerstone**

XD-68-10-025B

© David F. Schultz Associates, Ltd. All Rights Reserved.

David F. Schultz Associates, Ltd.
202 South Cook Street
Suite 201
Barrington, Illinois 60010
Phone (847) 381-8808

99% CONSTRUCTION DOCUMENTS

ST. LUKE PRESBYTERIAN CHURCH

DOWNERS GROVE, ILLINOIS

FOR OWNER REVIEW

REVISIONS

NOT FOR CONSTRUCTION!

DATE
JULY 31, 2008
PROJECT NUMBER
9908
SHEET NUMBER
A-4.1